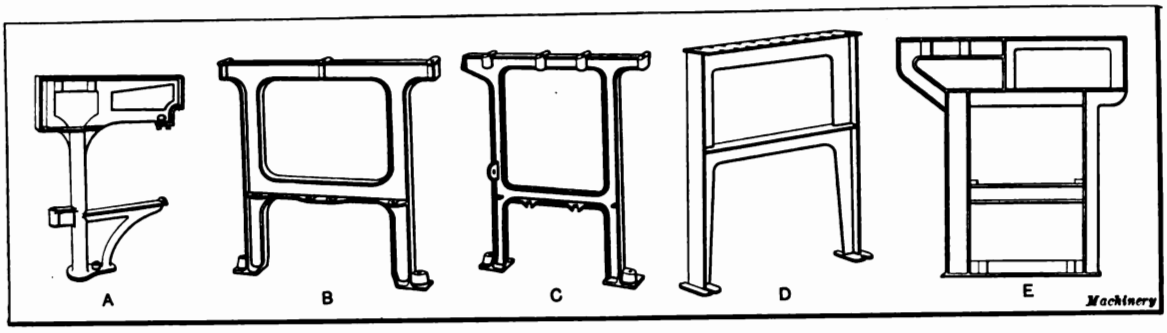

Fig. 1. Various Designs of Commercial Cast-iron Bench Legs

DESIGN AND CONSTRUCTION OF WORK-BENCHES

BENCH LEGS AND TOPS—LOCATION OF BENCHES—PORTABLE WORK-BENCHES

BY FRANK H. MAYOH[1]

BENCHES made in a workmanlike manner for the proper performance of hand and machine operations are a necessity in the modern shop. This fact will be realized when we consider the miles of benches that are strung along the walls and throughout our factories for use in conjunction with such work as filing and scraping, assembling, inspection, and numerous other jobs of machine shop practice that must be performed by hand. The purpose of a work-bench is to provide suitable means for performing hand or machine operations at a convenient height, this height depending upon such conditions as the nature of the work, the height of the man (and lately of the woman) using it, the kind and size of the machine placed upon it, in case the bench is intended for machines, and whether the work operated upon is to be held in a vise. These and many other conditions—some of which will be referred to later—have been taken into consideration in developing work-shop benches.

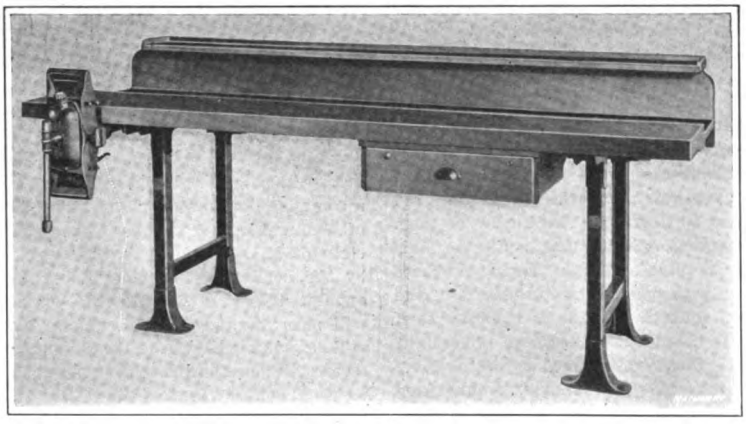

Fig. 2. Bench for Patternmakers built by New Britain Machine Co.

In the selection of a suitable bench for any particular purpose there is considerable latitude, but of recent years haphazard methods of selecting machine shop material, in general, have come to be looked upon with disfavor; consequently we find that in selecting suitable benches, light weight with rigidity, strength but not bulk, the proper kind of planking, sanitation, and movability without destruction are all points which are worth considering, while, of course, the construction of the top of the bench has much to do with its durability.

[1]Address: 87 Samuel Ave., Pawtucket, R. I.

Bench Legs or Supports

In some shops wooden posts are to be found as supports for work-benches, but the modern cast-iron and pressed steel legs are preferable. It is not the intention of the writer to place one kind of metal support before the other, as there are good and bad designs of both, while the lines of construction are closely allied. An example of good design is shown in Fig. 2. This illustration shows a complete unit supported on two legs for patternmakers' use. In this case, the legs are of pressed steel, the formed sections being electrically welded together. The top and back-board are made of wood, and a patternmaker's vise is shown at the left-hand end of the bench. This bench may be made in a unit, as shown, or it may be extended indefinitely. It will be noticed that the back-board is constructed with a shelf on top.

A group of cast-iron bench legs of varied design is illustrated in Fig. 1. These are typical of the general line of cast-iron legs. Some are cast in I-section and some in T-section.

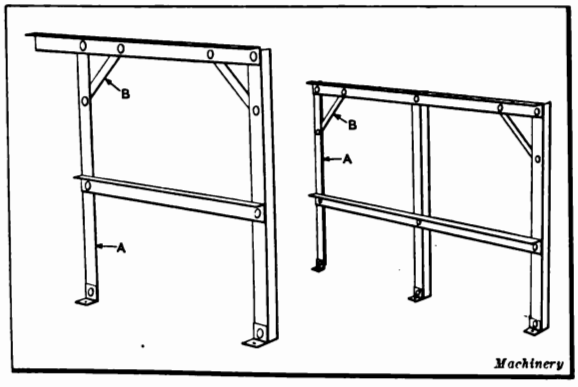

Fig. 3. Bench Legs in Single and Double Types made of Angle-iron

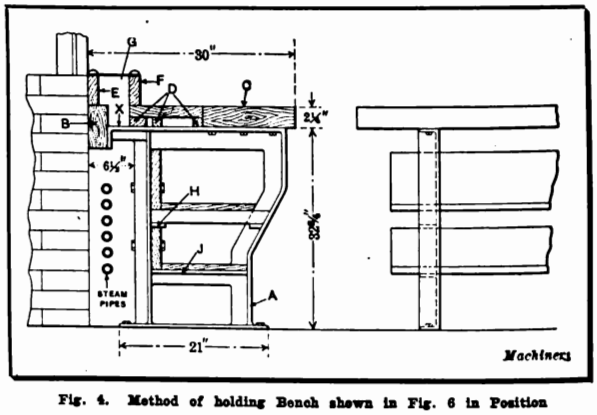

Fig. 4. Method of holding Bench shown in Fig. 6 in Position

Digitized by Google

The one shown at *A* is of the tubular stand or pedestal type. The one illustrated at *B* is a double-width type and is similar in construction to that shown at *C*. The design illustrated at *D* has a number of bolt holes through the flange, while the other legs shown have bosses through which the bolts go. Bench legs built of angle-iron are illustrated in Fig. 3. The one shown to the left is of the single-width type, while that

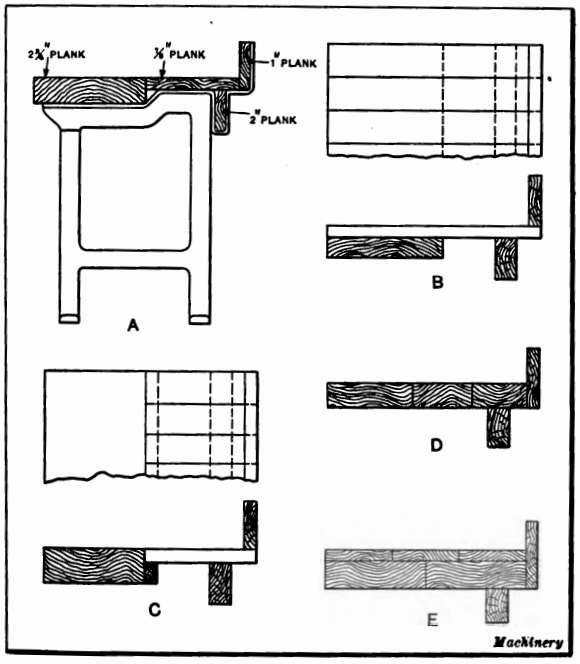

Fig. 5. Different Methods of constructing Tops of Work-benches

to the right is a double-width design. There are two angle-iron supports *A* in the single-width leg and three in the double-width type. A cross-piece is bolted on the top, and there is another piece (or two in some cases) part way down the leg, which act as braces and also serve for holding shelves. Additional strips *B* are bolted across the corners for increasing the stiffness.

In regard to wooden bench legs, apart from being bulky and combustible, it is almost impossible to make them so they

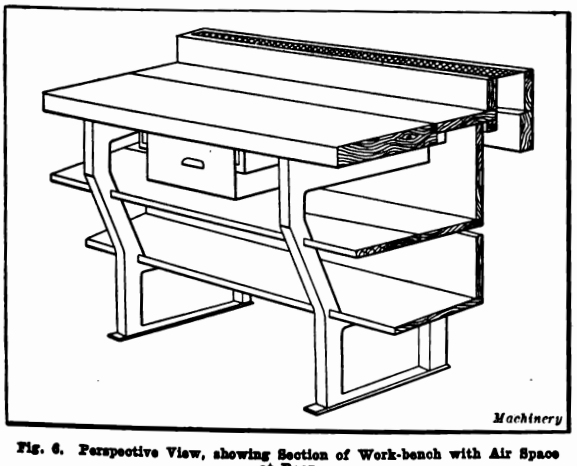

Fig. 6. Perspective View, showing Section of Work-bench with Air Space at Rear

will hold their shape, owing to the difficulty of getting wood that is well seasoned or dry enough, as even when carefully jointed it will shrink and leave the bench shaky; besides, good wooden joints are expensive to make.

The Bench Top

Metal tops for benches have been used to some extent, but in the handling of tools on a metal bench these are often injured by contact with the hard surface and wood is gen-

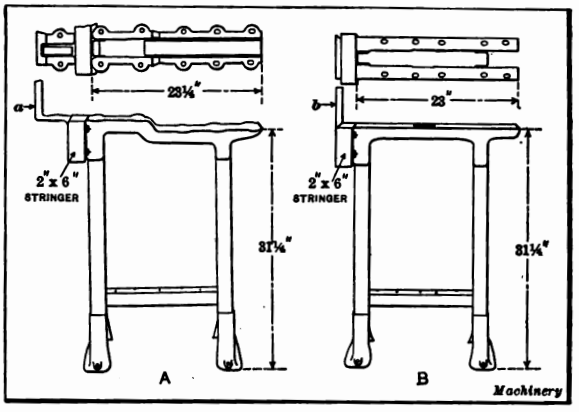

Fig. 7. Steel Bench Legs with (A) Angle Bracket for Back-board and (B) Straight Bracket for Back-board

erally used. A wooden bench top should be laid close to avoid cracks through which small parts might drop, with proper regard for shrinkage of the planks, and should be so laid as to avoid splintering when sliding work on and off. In Fig. 5, five forms of bench top construction are illustrated. In the upper view at *A* a bench with heavy 2¾-inch plank at the front and ⅞-inch plank in the rear is shown; both of these planks run lengthwise of the bench. At *B* is shown a construction in which it is planned to have the grain of the wood run from front to back. The bench top at *C* has a thick plank

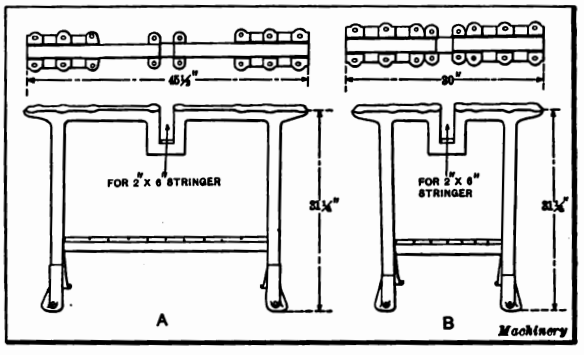

Fig. 8. (A) Wide Double Type of Pressed Steel Bench Leg. (B) Narrow Double Type

at the front running lengthwise of the bench, with short cross-boards at the back. In these three examples the expense entailed by having heavy planking throughout is avoided, which is an important consideration in view of the present prices of lumber. For some classes of work a heavy bench top is necessary. The bench top illustrated at *D* is built up with 2¾-inch planks running the full length and width. Where heavy, rough work is being continually dragged over a bench, the expense of keeping an ordinary top in repair becomes an im-

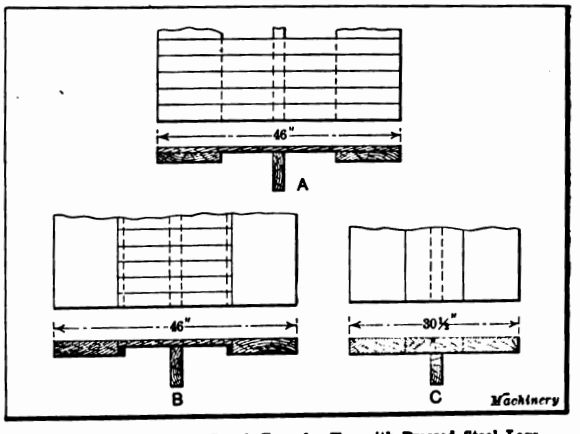

Fig. 9. Three Forms of Bench Tops for Use with Pressed Steel Legs illustrated in Fig. 8

Digitized by Google

portant item, and this expense can be considerably reduced by constructing it as shown at *E*, although the first cost is greater. In this construction, two heavy planks extend lengthwise of the bench, and on top of these, running either lengthwise or crosswise, ⅞-inch planks are placed. This ⅞-inch top can be planed down when it becomes rough, or it may be taken up and replaced at small cost as compared with the heavy planking. When the bench top is constructed in this way it can be made quite free from cracks, as the thin boards are usually more thoroughly seasoned than the planks; therefore, the planks will shrink more than the top boards and draw the latter together. When the top boards are placed crosswise of the bench with the end grain showing there is the objection that they may be readily chipped; nevertheless, where local wear occurs, the boards when set in this way are most easily replaced. In regard to lumber used for the bench, maple or ash has been found to be suitable for the thick front plank, with ⅞-inch pine stock at the back and for the shelves. Spruce or hemlock is suitable for the back-board and other incidentals.

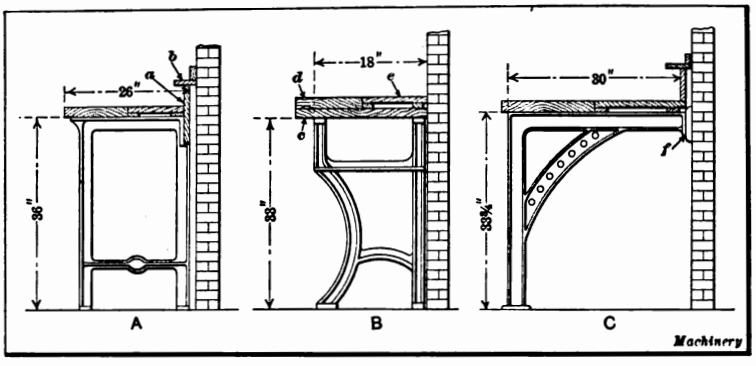

Fig. 11. (A) Bench of Straight-leg Type. (B) Curved-leg Type. (C) Angle-iron Type

Location of Benches and General Features

The best method of locating a bench is to set it away from the wall, so that, in case of fire, water from the sprinklers can get around it; this location also allows the heat from the steam pipes to rise, and leaves a convenient space where gas and air pipes may be placed. Fig. 6 illustrates a bench set up in this manner. Thick plank is used at the front and ⅞-inch plank at the back. There are two shelves beneath the bench and a drawer. An extension *X*, Fig. 4, holds it away from the wall, and the bench leg *A* is bolted to the floor. A plank *B* extends along the wall or suitable blocks are bolted in place where the legs come, the latter usually being about six feet apart with this type of leg. To plank *B* the back of the bench leg is bolted. Three bolts securely hold the legs in position (two in the floor and one in the wall), and after leveling all the legs in a row, the heavy plank *C* is bolted in position. The three strips *D* are next put in place and the back plank is placed on top of these, wire nails and screws being used for holding it in place. This completes the top of the bench. The board *E* is now placed in position on the wall and the back-board *F* attached. The wire mesh *G* is next stretched over the two boards *E* and *F* and is securely held in place by nails. This prevents things from being thrown or dropped down back of the bench, but it does not interfere in any way with proper ventilation or lessen the fire protection. Two sets of lugs *H* and *J* are cast on the legs and may be used for building either one or two shelves under the bench by placing boards on them in the manner shown. If the back-boards used in connection with the shelves on these legs are made to drive between the lugs, they provide additional stiffness for the entire bench.

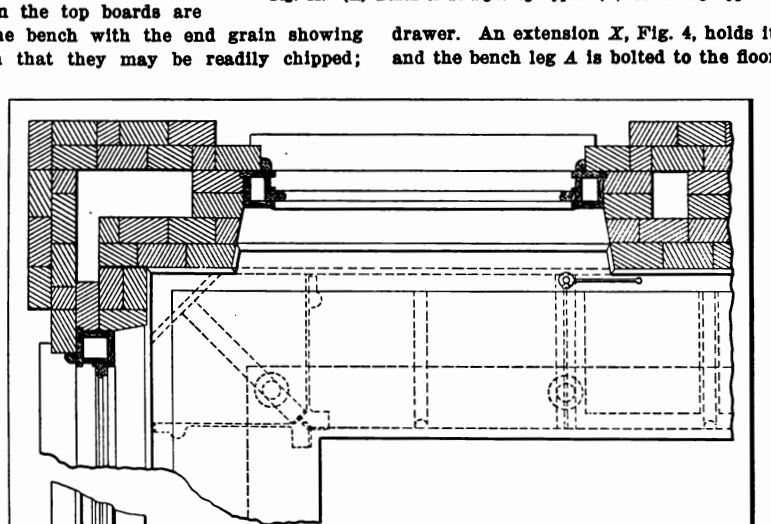

Fig. 12. Elevation and Plan illustrating Corner Construction of Work-bench

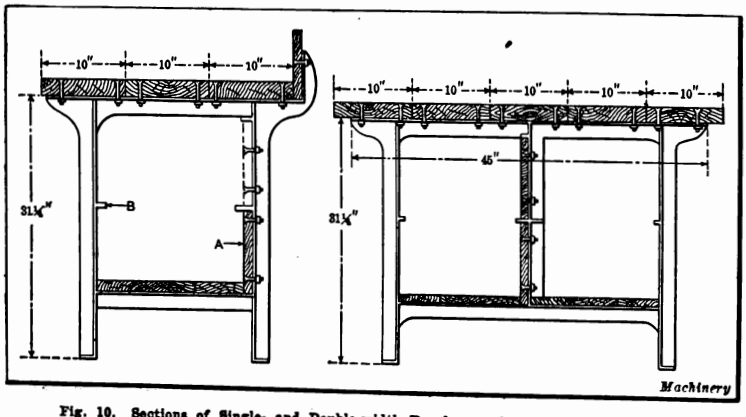

Fig. 10. Sections of Single- and Double-width Benches equipped with Cast-iron Legs

The foregoing remarks concerning bench tops apply whether using bench legs made of cast iron or of steel. Examples of the latter type, made by the New Britain Machine Co., are illustrated in Fig. 7. The leg shown at *A* has a step of 1½ inch at the top to allow a thick plank to be used in front with a thin one at the back without building up the back-plank as shown in Fig. 6. An angle-iron *a*, Fig. 7, is bolted to a 2- by

Digitized by Google

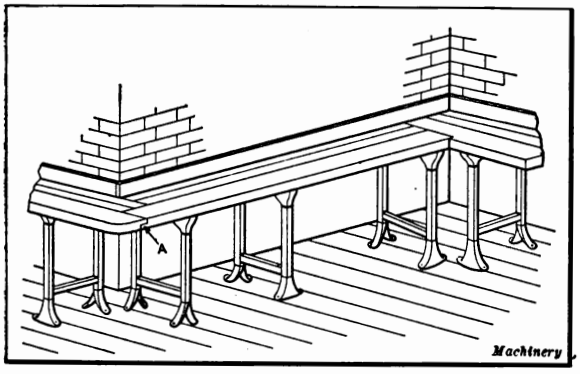

Fig. 13. Another Method of constructing a Work-bench at Corners

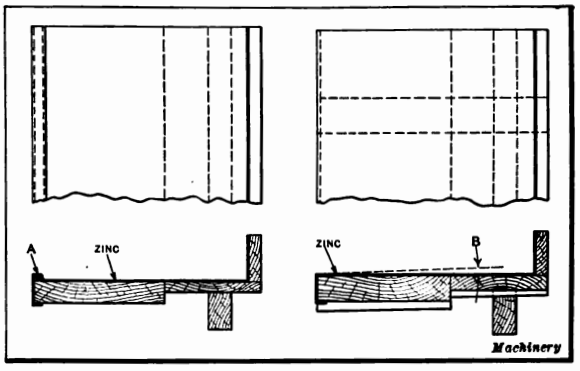

Fig. 14. Two Methods of covering Tops of Benches with Sheet Metal

6-inch stringer which runs the length of the bench. The leg with a flat top shown at *B* may be used with plank of uniform thickness, or by building up, two thicknesses of plank may be used. With this leg, a straight piece *b* bolted to the stringer is used for holding the back-board.

A leg suitable for constructing a double-width bench is shown at *A*, Fig. 8, while the design illustrated at *B* is intended for a single-width bench of the same type. Three forms of bench tops for use with these legs are illustrated in Fig. 9. The upper view *A* shows a cross-plank construction, *B* shows heavy front planks at both sides with thin cross-pieces in the center, while *C* shows the heavy type of construction throughout. In these illustrations it will be noticed that in each case the 2-inch by 6-inch stringer has been run lengthwise of the bench. This adds considerably to the rigidity of the bench and also helps to prevent end sway. With this construction it is not necessary to bolt the legs to the wall.

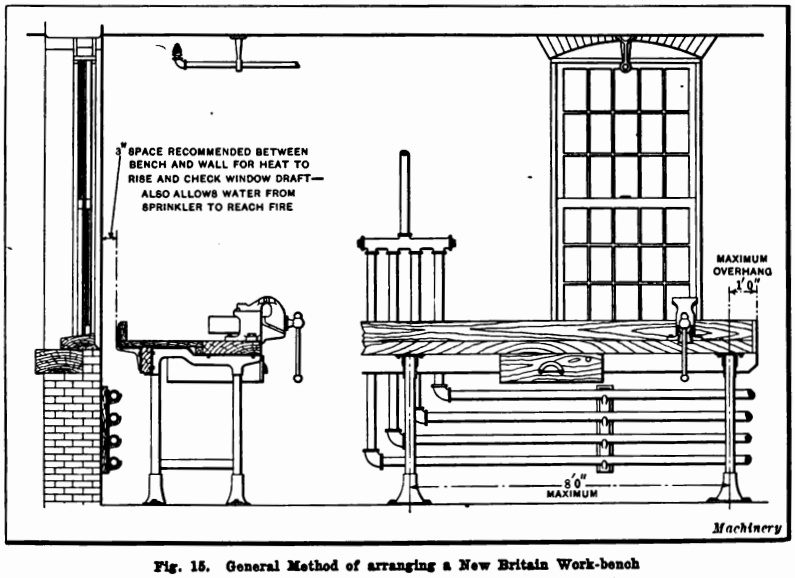

Fig. 15. General Method of arranging a New Britain Work-bench

Two types of bench legs made from cast iron are illustrated in Fig. 10. These views show end sections of both a single- and double-width bench. The construction is obvious from the illustration, the benches being built up from one thickness of planking with one shelf beneath the bench and a back-board. When constructing this bench the back-board *A* should be wedged between the shelf and the lug to provide additional stiffness for the bench, while if a board similar to the back-board is placed between the shelf and the lug *B* a bin is made under the bench. This is sometimes desirable, and also applies to the double-width bench at the right.

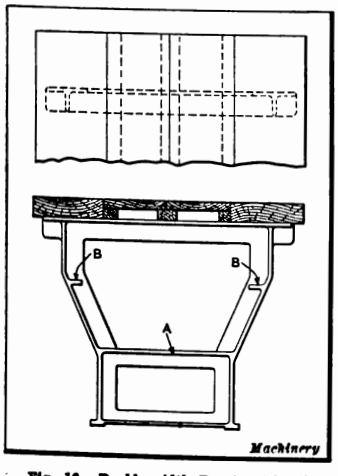

Fig. 16. Double-width Bench with all Planks extending Lengthwise

Three end sections of benches that are set up close to the wall are shown in Fig. 11. The one at *A* is a straight-leg type, while the design shown at *B* has a curved leg. With the straight-leg type, heavy planking is used in front and light boards in the rear. A stringer *a* also is used as a back-board. On top of this stringer a small shelf *b* is provided. The curved bench leg is set against the wall and is built with a cross-piece *c* on top of the leg. A heavy front plank *d* with a light board *e* in the rear are used. The curved shape of this leg enables a man to sit down in the front of the bench with less interference to his knees than in the case of some types of straight legs. The angle-iron type of leg illustrated at *C* must be securely bolted to the wall at *f* and is not very suitable for heavy work. The arrangement of the planking on top of these legs is similar to some of the examples previously shown, and may, of course, be varied to suit conditions.

A construction drawing of the pedestal type of leg is illustrated by Fig. 12. This shows a corner construction and the method of bolting the bench to the wall. The draw-bolt *A* is

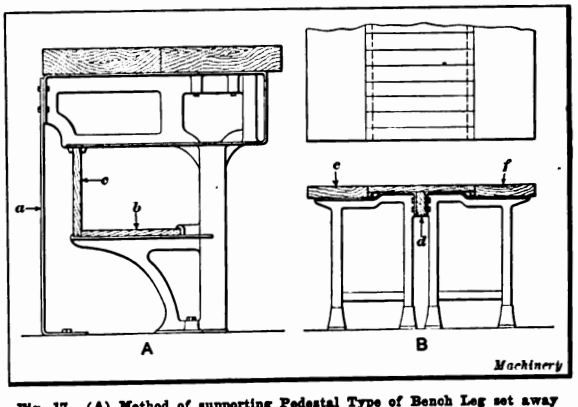

Fig. 17. (A) Method of supporting Pedestal Type of Bench Leg set away from Wall. (B) Two Single-width Bench Legs bolted together

Digitized by Google

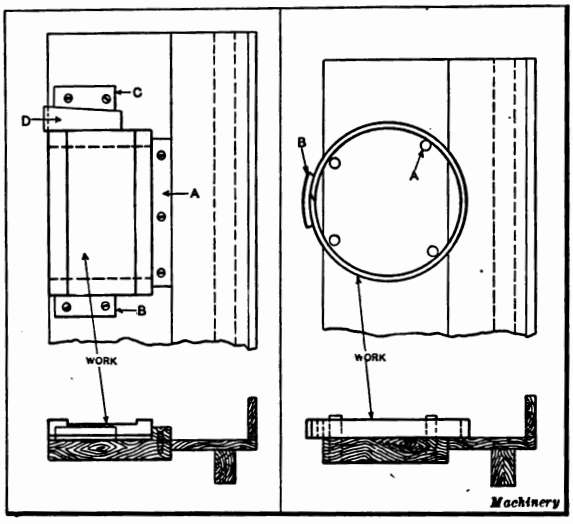

Fig. 18. Simple Method of holding Flat Plates while scraping

Fig. 19. Use of Pins on Bench for holding Rings

used for holding a vise, thus bringing the vise directly over the bench leg. The gas brackets are placed on a shelf with the supply pipe under it. Another view of a bench showing the corner construction is illustrated in Fig. 13. The arrangement differs from that shown in Fig. 12, as two legs are used at each corner. The construction is obvious from the illustration, which shows both types of corners. This illustration also shows how the planking is laid at the corners to obtain stiffness. Attention is called to the method of rabbeting the corner at *A*. It is sometimes advisable to rabbet the back-plank for its entire length, thus supporting the front edge of the back-plank. This is more desirable where no stringer is provided, as the back-plank is then likely to spring down under heavy loads. The bolts used in bench construction for holding the planks should be placed well to the front of the elongated holes in the legs, so that as the planks shrink the bolts will be drawn back with them, thereby lessening the chance of the planks splitting.

Fig. 15 illustrates some of the features which are recommended in connection with the installation of the New Britain bench. It will be noted that a three-inch space is recommended between the bench and the wall. For ordinary work a distance of eight feet between the legs has been found satisfactory for this type of bench, although for heavy work or where great stiffness is desired, this distance should be less, often being five or six feet. In erecting this bench, it is recommended that the front plank be twelve or fourteen inches wide and three inches thick (planed 2¾ inches). These planks may be obtained in sixteen-foot lengths, which allows the ends of abutting planks to come over every other leg; this eliminates lap joints, which would be necessary were the joints to come between the legs. A convenient method of locating the bench is to set up the two end legs; then by drawing a line tight between these legs all the intermediate legs may be set up to this line.

A double-width bench is illustrated in Fig. 16. With this construction, the planks lie lengthwise and provision is made for hanging shelves on lugs *A* and *B*. When a bench must be set away from the wall, the pedestal type of leg is somewhat at a disadvantage, as it will not stand alone like many of the others which are suitably balanced. This may be remedied by using a brace *a* made of steel as at *A* in Fig. 17. With this addition, this type of bench may be readily erected and is very satisfactory. This illustration shows heavy planking over the entire top, while a shelf *b* and back-board *c* are provided.

Benches of double width with wide legs, while economical when set in the middle of the floor, cannot be taken down and used to good advantage against the wall; therefore, two single-width bench legs, bolted together to form one double-width bench, as shown at *B*, Fig. 17, are sometimes more economical than a double-width leg, when the construction is not likely to be permanent. In this construction, two legs are bolted back to back against a stringer *d*. Heavy planking *e* and *f* is placed at the front of each leg, and narrow pieces laid crosswise complete the construction. These cross-pieces may be hard-wood flooring, tongued and grooved, or plain boards, as desired.

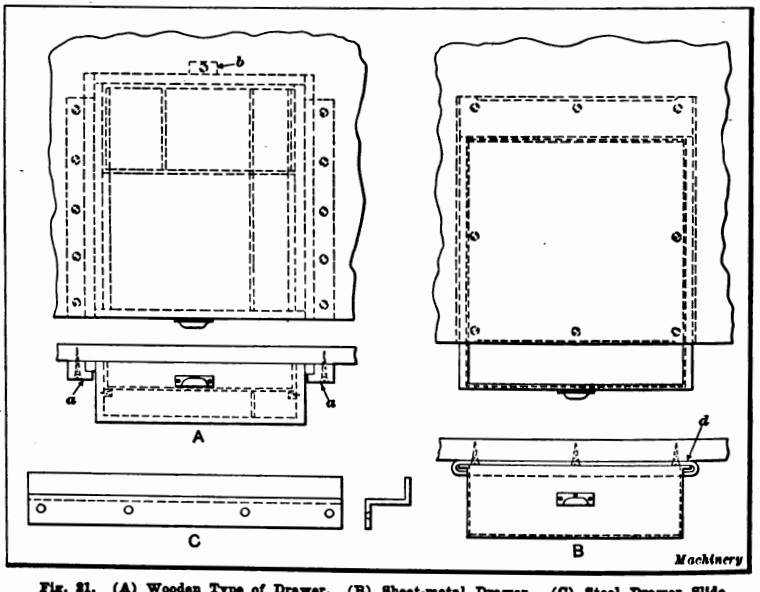

Fig. 21. (A) Wooden Type of Drawer. (B) Sheet-metal Drawer. (C) Steel Drawer Slide for replacing Wooden Strips

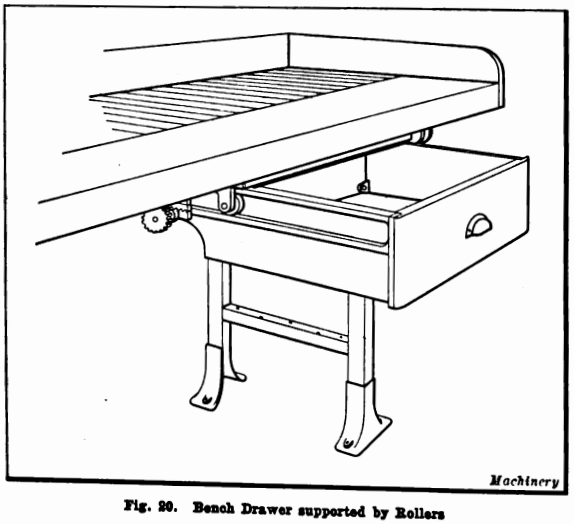

Fig. 20. Bench Drawer supported by Rollers

Where a lot of small work is handled on a bench, it is often a good plan to cover the top with sheet metal. In this connection the two views in Fig. 14 are of interest. The view to the left shows a zinc-covered bench top, and it will be noticed that a beading *A* is placed at the front of the bench to prevent the work from rolling off. Another method of constructing a bench top which is covered with zinc is shown by the right-hand view. The bench is tapered back as indicated at *B*. Hard paper is sometimes used for bench covering where delicate work is handled. In some instances, bench tops are built up from small blocks with the end grain on top; these blocks are wedged between stringers and are sometimes glued together, after which they are surfaced with a planer. This

Digitized by Google

makes a fine wear-resisting bench and is similar to the wooden paving block constructions often used on streets which have considerable traffic on them.

For handling small castings, etc., it is often found convenient to have a bin under the bench. Fig. 22 shows how this can be arranged without wasting floor space. The bin *A* is placed part way under the bench while the workman stands at the opposite side. A suitable hole is cut through the bin where the bench legs interfere. In fitting up a bench for efficient work, many appliances may be used which will greatly facilitate the handling of work which is to be made in quantities. These often take the form of shelves, stops, holes, etc. To illustrate in a general way what some of these conveniences are, reference is made to Fig. 18, which shows a method of holding work while scraping it. Three blocks *A*, *B* and *C* are attached to the bench and a wedge *D* is used to hold the work securely between

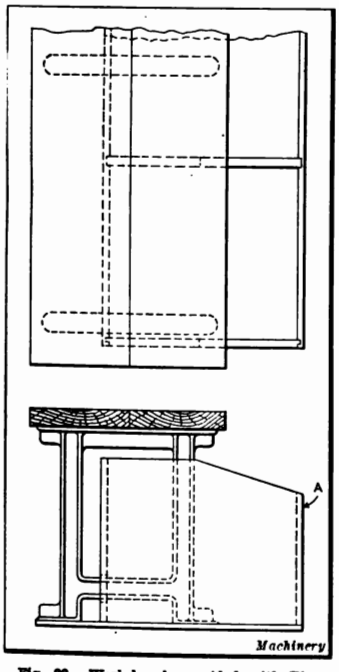

Fig. 22. Work-bench provided with Bin which is located Part Way under Bench to economize in Floor Space

these blocks. With this arrangement the scraping may be done much more conveniently than would be the case if some means of holding the work in position were not provided. Fig. 19 shows a method of holding a ring on the bench. Steel pins *A* merely keep the ring in position while screwing the plate *B* in place on the ring.

Drawers for Work-benches

The hanging of drawers to the bench is receiving more consideration of late than would be thought by looking at some bench constructions. This refers particularly to the use of metal drawers and covers for them. Referring to Fig. 21, a wooden bench drawer is shown at *A*. This is a common type and is hung on wooden slides. It has a till in it divided into sections for keeping small tools and a block *b* is bolted to the under side of the bench to act as a stop when pushing the drawer in. To prevent the

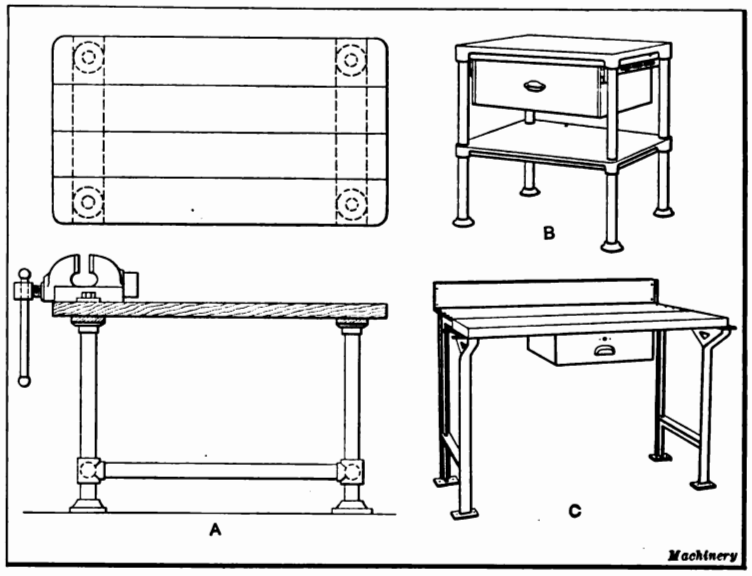

Fig. 23. Examples of Portable Work-bench Construction

drawer from being accidentally pulled out too far, thus throwing the contents on the floor, a block is sometimes placed under the bench to limit the travel. The view *B* at the right shows a sheet-metal drawer. The drawer proper is hung in the support *d* which is also made of sheet metal and is held by screws to the under side of the bench so that the drawer slides in it. This support acts as a cover for the drawer and assists in keeping out dust. Steel slides, such as are shown at *C* are sometimes used for hanging drawers where something better than wood is desired.

A bench drawer hung on rolls is illustrated in Fig. 20. This drawer is made of wood at the bottom, front, and back, while the remainder is of steel; with this construction fine tools are not damaged when thrown carelessly into it. A metal plate is placed over the top of the drawer and is screwed to the bench, thus covering the drawer entirely when closed and preventing dust from entering. The rolls on which the drawer operates prevent sticking or cramping.

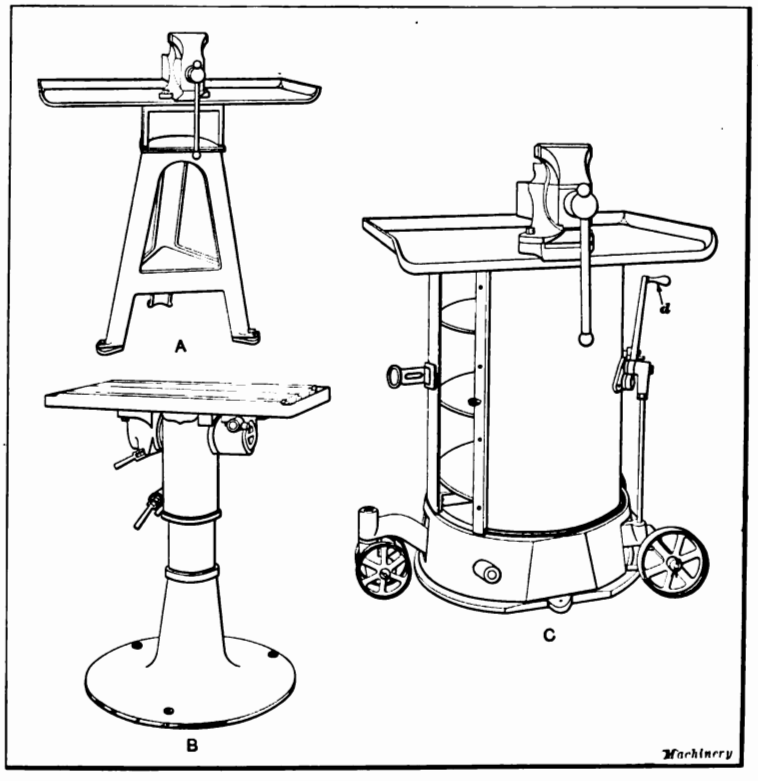

Fig. 24. Portable Stands for Chipping, Filing, and Scraping

Digitized by Google

Portable Work-benches

Many single-purpose benches that are a complete unit and capable of being moved almost anywhere quite readily are used in many shops and factories. Perhaps the most familiar bench of this type is shown at *A* in Fig. 23. This is used by steam fitters, plumbers, etc., and usually consists of a plank top mounted on four legs made of pipe and stiffened with a cross-piece. Another type of bench carrying a drawer and shelf which is compact and handy is illustrated at *B*. This consists of a wooden top held to a suitable frame and mounted on pipe legs. A work-bench made of sheet metal and constructed in five-foot sections is shown at *C*. Each section is a complete unit which may be used independently or may be bolted to other sections, thus making a long bench. This bench is made by the Manufacturing Equipment & Engineering Co. and is shown with a drawer in position. Where one section is bolted to another, one leg on one of the sections is eliminated. This makes three legs in every ten-foot section throughout the length of the bench.

For filing and chipping on the floor and doing other assembling operations, a bench which is conveniently located and has a vise is greatly appreciated and saves considerable running back and forth. Such a bench is shown at *A* in Fig. 24. This consists of a tray mounted on a three-legged stand. This construction requires no shimming up on the floor as it will take a three-point bearing on an unequal floor. The tray provides for holding a number of small parts, and a vise completes the outfit. Another stand which is used for the same purpose but which is a little more elaborate is illustrated at *C*. This stand is mounted on wheels although when in use it rests on the floor. To move it from one part of the shop to another the wheels are lowered or the stand is raised by means of the lever *d*. This stand is made in cylindrical form with a tray. Inside the cylinder are placed a number of shelves which can be used for holding tools. Another stand which is simple in construction is illustrated at *B*. This stand is for holding work while scraping. It consists of a pedestal and a table which may be tilted to a convenient scraping angle and may also be elevated to suit the workman.

While not all of the benches that are in general use have been illustrated and only a few bench accessories have been shown in connection with this article, it is believed that enough have been described to indicate that the trend of general engineering practice is in the direction of something better than plain wood for work-benches. The bench as an item of shop equipment permits of considerable freak design or construction if one is so inclined, but the writer believes that good benches, properly constructed, mean much more to a shop than is generally supposed.

* * *

Digitized by Google